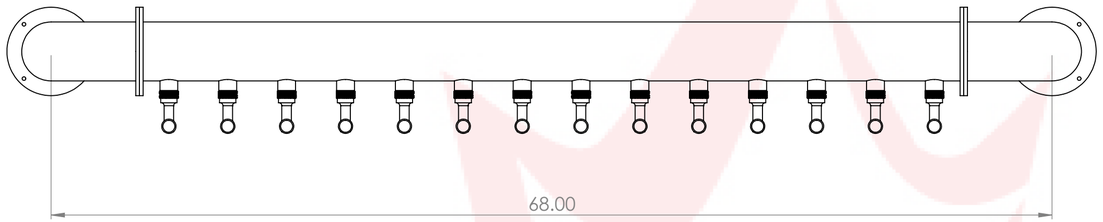

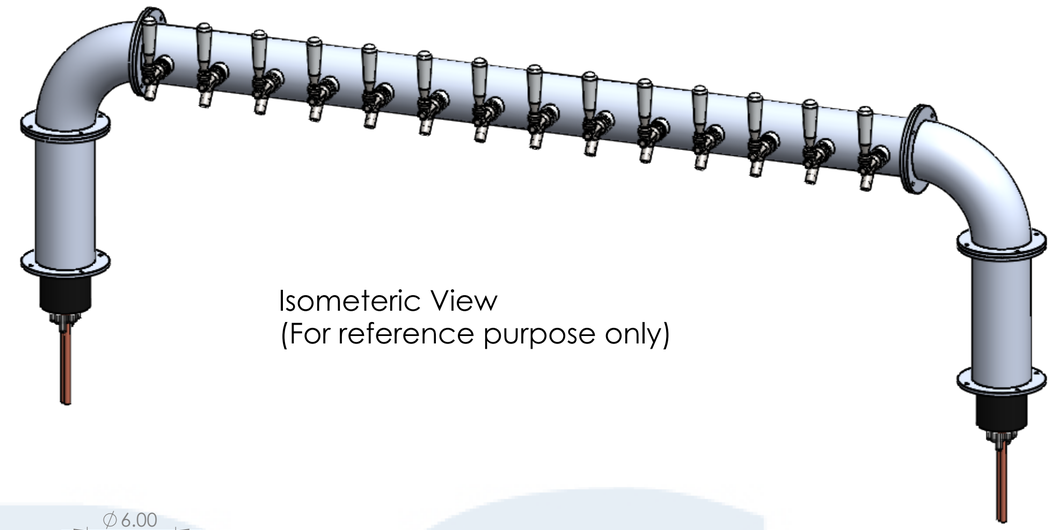

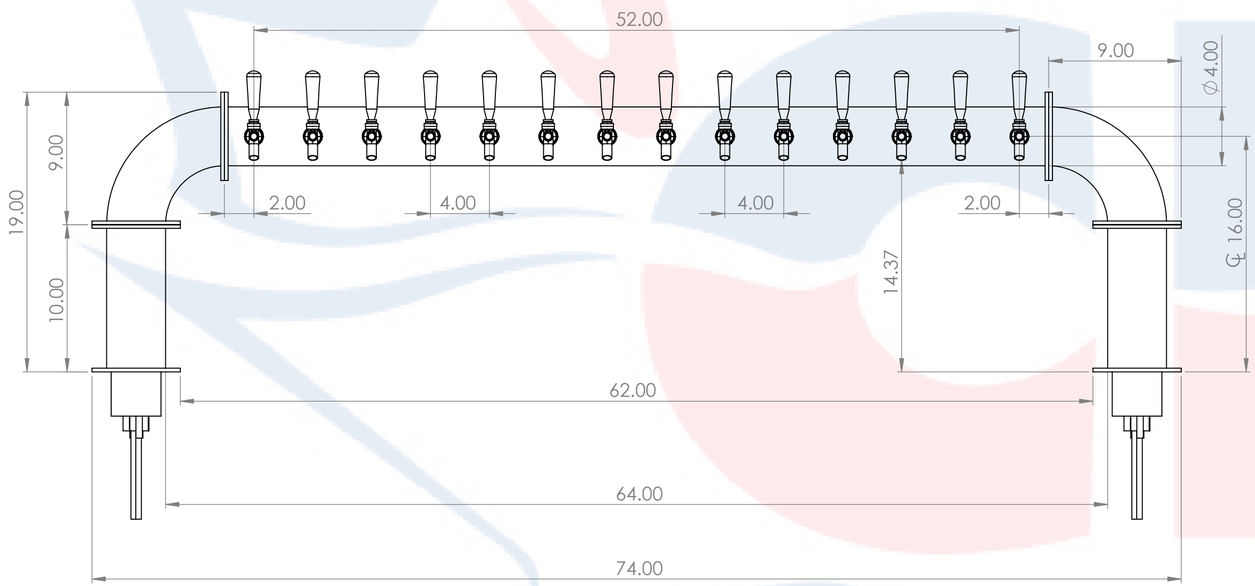

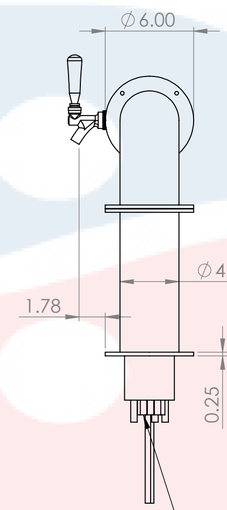

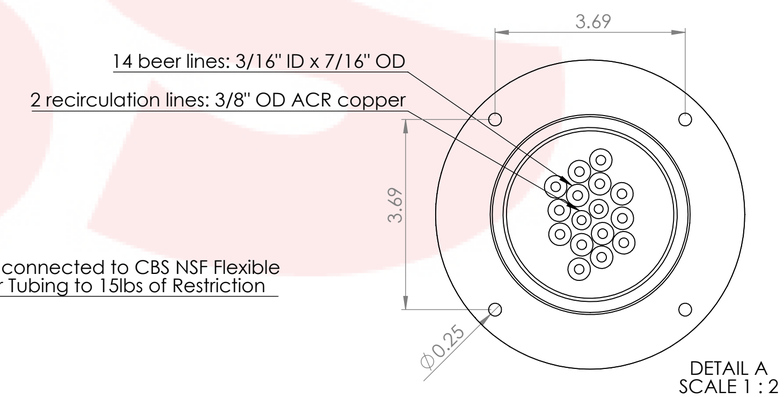

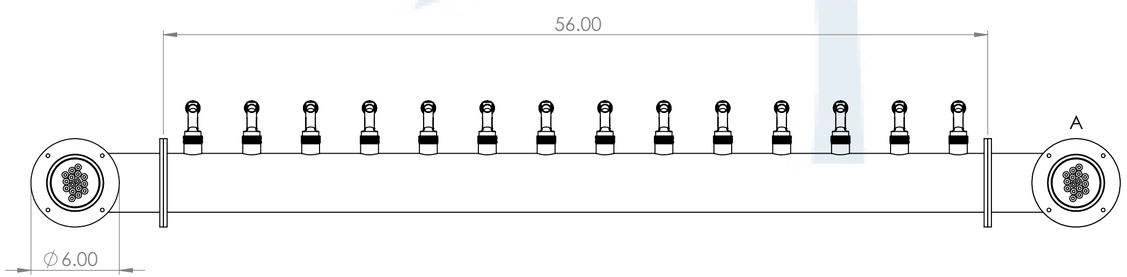

Suggested Drip Tray:
2 x BB701330 - 30" x 7" BSS Drip Tray
2 x BB702430 - 30" x 7" BSS Spray Drip Tray

	Name		Date	Title:
Drawn by:	Canadian Beverage Supply Inc.		11/23/2022	4" 14 Tap Lions Gate Tower
Approved by:	VP Sales			
Material:	304 SS	Finish:	Brushed SS	Part Number: BB102629-14SSCK / Revision:
Unless otherwise mentioned, dimensions are inches				SCALE: 1:7 / SHEET 1 OF 1